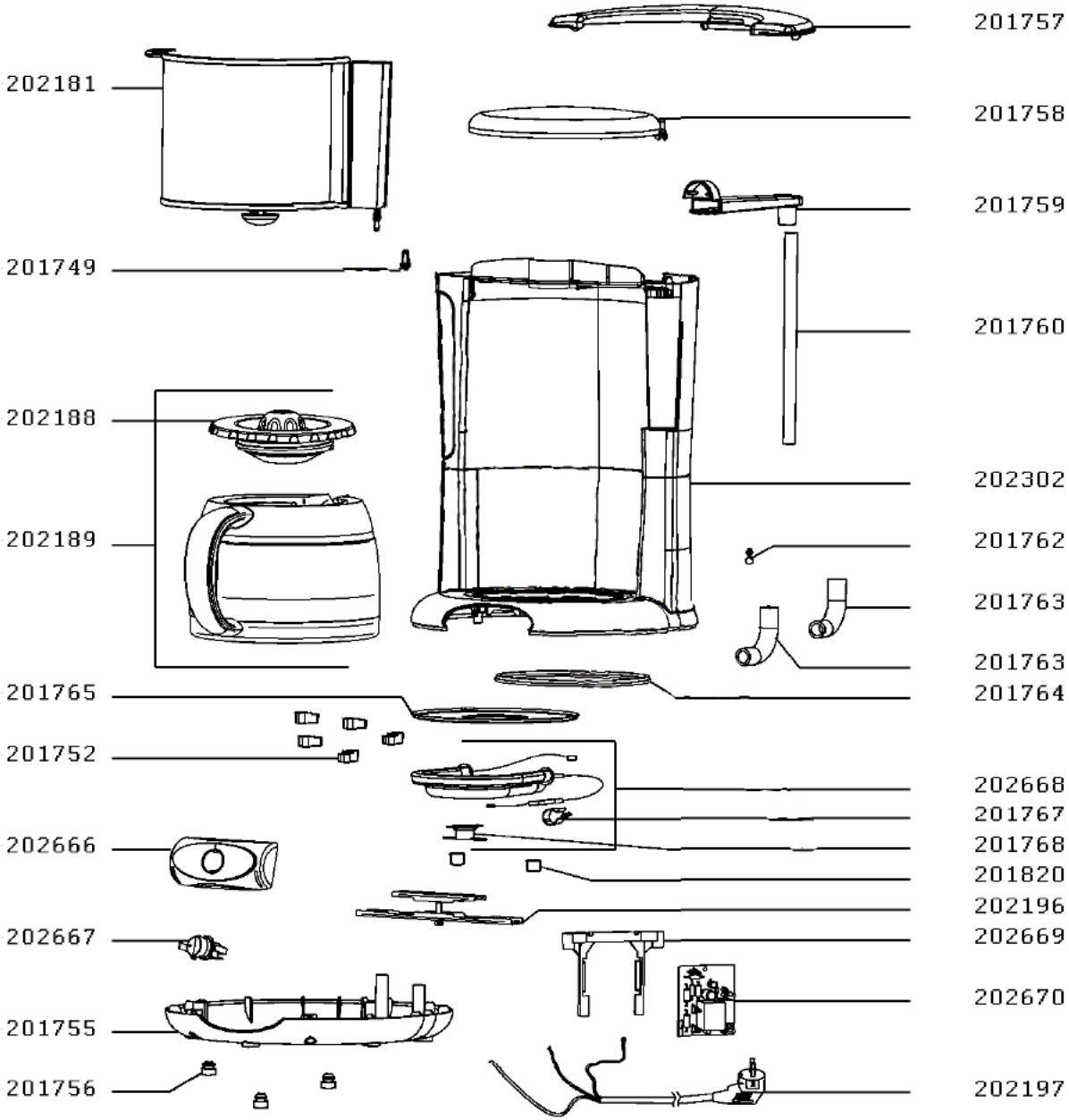
201757
202181
201758
201759
201749
201760
202188
202302
202189
201762
201763
201763
201765
201764
201752
202668
201767
202666
201768
201820
202196
202667
202669
202670
201755
201756
202197